删除: <sp>

1. Scope

The specification describes the technology parameters and testing standard for the lithium ion rechargeable cell is presented by Hong Kong Batteries Manufactory Limited

2. Products specified

2.1 Name Cylindrical Lithium Ion Rechargeable Cell
2 .2 Type 18650F-2300mAh

3. References

This specification is referenced GB/T18287-2000、UL1642、IEC61960-1:2000.

4. Caution:

4.1 Please read the specification book carefully before testing or using the cell, as improper handling of Lithium-ion cell may result in lose of efficiency, heating ignition, electrolyte leakage or even explosion.

4.2 While testing the cell of charging and discharging, please use the testing equipment special for li-ion cell, forbid to use the ordinary source of constant current and constant voltage, which fails to restrict charge and discharge to cell in order to prevent the cell from being overcharged and over-discharged, triggering losing the function of the cell or dangers.

4.3 When charging and discharging to the cell or packing it into the equipment, reversing the terminals of cathode and anode or it will make the cell overcharging and over-discharging, causing the cell to lose efficiency seriously and even explode.

4.4 Do not weld the cell directly, forbid resolving the cell.

4.5 Do not put the cell together with such metal products as necklace, hairpin, coin or screw in the pocket or in the bag; neither store them together. Forbid to connect the positive and negative electrode directly with such conductive materials as metal, or it may make the cell short-circuit.

4.6 Forbid beating, throwing or trampling the cell, do not put the cell into the washing machine or the high-pressure container.

4.7 Do not get the cell close to heat source, for instance, fire, heater etc. Do not use or deposit the cell under the circumstance of burning sun or the temperature exceeding 60℃, or it may cause the cell to generate heat, heating ignition and lose of efficiency.

4.8 Do not get the cell wet or throw the cell into water, when not used, it should be put in the dry and low temperature environment.

4.9 While using, testing or preserving the cell, if you find the battery become hot , distribute smell , change color, deform or any other abnormality, please stop using or testing immediately, and attempt to isolate and keep away from the cell.

4.10 If the cell leaks, the electrolyte gets into the eyes, do not rub eyes, instead, rinse the eyes with clean water, and seek medical service if serious .If the electrolyte gets onto the skin or clothes, wash it with clean water immediately.

删除: <sp>

5. Basic characteristics

5.1 Capacity	Nominal Capacity : 2300mAh（0.5C_A Discharge）
	Minimum Capacity: 2300mAh (0.2C_A Discharge)
5.2 Nominal Voltage	3.7V
5.3 Internal impedance	≤ 70mΩ(with PTC)
5.4 Discharge Cut-off Voltage	3.0V
5.5 Max Charge Voltage	4.20±0.02V
5.6 Standard Charge Current	0.5C_A
5.7 Rapid Charge Current	1C_A
5.8 Standard Discharge Current	0.5C_A
5.9 Rapid Discharge Current	1C_A
5.10 Max Discharge Current	2.0 C_A
5.11 Weight	45±1g
5.12 Max. Dimension	Diameter(φ) : 18.3mm
	Height (H) : 65.0mm (See Figure 1.)
5.13 Operating Temperature	Charge 0 ~ 45℃
	Discharge -20 ~ 60℃
5.14 Storage Temperature	Within 1 month -5 ~ 35℃
	Within 6 months 0 ~ 35℃

6. Standard Conditions for Test

Unless specified, all tests should be conducted within one month after the delivery under the following conditions: Ambient Temperature:25±5℃; Relative Huimdity:65±20%

6.1 Standard Charge:	Constant Current and Constant Voltage (CC/CV) Current = 1150mA End-up Voltage = 4.2 V End Current = 23mA
6.2 Standard Discharge:	Constant Current (CC) Current = 1150mA End Voltage = 3.0V

7. Appearance

The surface must be clean, no hurt, no rust and with product label.

删除: <sp>

8. Characteristics

※In this section , the Standard Conditions of Tests see the part 6.

8.1 Electrical Performances

Items	Test procedure	Requirements
8.1.1NominalVoltage	The average value of the working voltage in the whole discharge progress.	3.7V
8.1.2 Discharge Performance	The discharge capacity of the cell, which is measured at $1C_5$ A (or 0.5CA) current discharge to 3.0V within 1 hour after completely charge.	≥57(or 120)min
8.1.3 Capacity Retention	After 28 days storage at 25±5℃ after completed charge, the residual capacity is above 90%.	Capacity≥ 2070mAh
8.1.4 Cycle Life	After 300 cycles in 100% DOD charge and discharge at 0.5CA current, the residual discharge capacity is above 60% of nominal capacity.	≥400 cycles
8.1.5 Storage	(Within 3 months after manufactured) after standard charged 40-50% capacity and stored at ambient temperature 25±5℃、65±20%RH for 12 months, the storage expiry and the cell completely charged, the cell is discharged at 0.2 CA current discharge to 3.0V.	Discharge time≥4h

8.2 safety Performances

8.2.1 Short Circuit	The cell is to be short-circuited by connecting the positive and negative terminals of the cell directly with copper wire with a resistance less than 0.05Ω.	No fire, no explosion.
8.2.2 Impact Test	Impacting of a cell on a hard surface following a hammer of 10 kilograms free fall from 1m height.(See Figure 6).	No fire, no explosion.
8.2.3 Overcharge (3C/10V)	The cell that connect with the thermocouple is put in the fume hood, the positive and negative terminals are connected by a permanent constant electrical source, regulate current to 3 CA and voltage to 10 V. Then charge the cell until voltage is 10 V, current about 0A. Monitor the temperature change of cell when the temperature of cell is about lower 10℃than peak value, the test is over.	No fire, no explosion.
8.2.4Thermal shock	After standard charging , heat cell to 150±2℃at rate of 5±2℃/min and keep 10 minutes.	No fire, no explosion.

删除: <sp>

8.3 Environmental tests

8.3.1 High temperature performance	The fully charged cell is put in the surroundings of 55±2℃for 2 hours, and then it is discharged to the 2.75V at 1CA current rate.	Capacity≥2070mAh
8.3.2 Low temperature performance	The charged cell is put 16-24 hours at -20±2℃ and then discharge to 2.75V at 0.2 CA current rate.	Capacity≥1610mAh
8.3.3 Anti-vibration	After standard charging, the cell is fixed on the platform and be subjected to vibrate on following frequency 10~55Hz and amplitude vibration for 30 minutes with direction of X, Y. Vibration Frequency: 10~30Hz, vibration amplitude 0.38mm. Vibration Frequency: 30~55Hz, vibration amplitude 0.19mm	By visual check, the cell is not found to deform, leak, smoke and explode, the cell voltage is no less than 3.6V.
8.3.4 Drop Test	The cell is to be dropped from a height of 1m to hard board in X、Y、Z directions for twice respectively. Then discharge the cell at 1CA current rate to 3.0V, and undertake more than three circles of standard charge and discharge at 1CA current rate.	No fire, no explosion.

9. Packing

Keep the cells at the half-fully charged state before packing, Packing box surface must contain following content：name, type, nominal voltage, quantity, weight, date, capacity and impedance.

10.Transportation:

Violent shaking, bumping, rain and flaring sun shall be forbidden during the transportation. Keep the cells at the half-fully charged state.

11. Storage

Please keep the cell in the cool and dry environment: Within 1 month -5 ~ 35℃or Within 6 months ,0 ~ 35℃，Relative humidity≤75%, Keep the cells at the half-fully charged state.

12. Warranty period of this product is 6 months from leaving plant.

13. We will not guarantee against any accidents occurring due to usage against this specification.

14. The information in this specification subject to change without prior notice.

15. The information contained in this document is for reference only and should not be used as a basis for product guarantee or warranty. For applications other than those described here, please consult your nearest South Korea Sales Office or Distributors (Hong Kong Batteries)

Distribution by: **Hong Kong Batteries Manufactory Limited**
Tel: (852) 27988548- 10 lines Fax: (852) 27980321 Email: sales@hk-batteries.com

删除: <sp>

APPENDIX

Figure 1.

Dimension

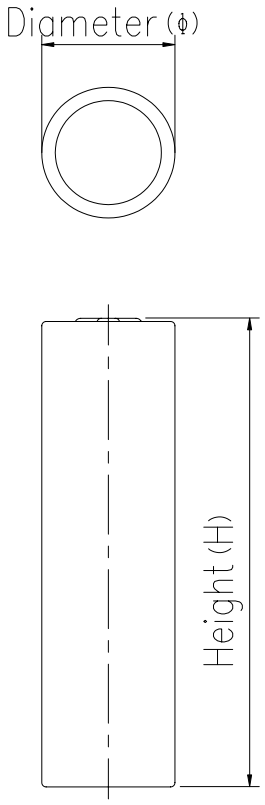

Max Diameter （ϕ）	18.3 **mm**
Max Height （H）	65.0 **mm**

Distribution by: **Hong Kong Batteries Manufactory Limited**
Tel: (852) 27988548- 10 lines Fax: (852) 27980321 Email: sales@hk-batteries.com

Figure 2. 0.5C_A charge Performance Curves

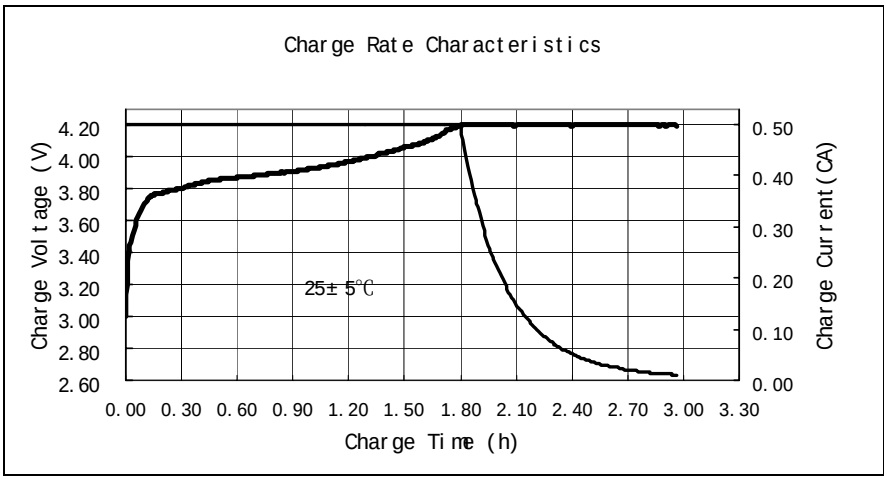

Figure 3. 1C_A charge Performance Curves

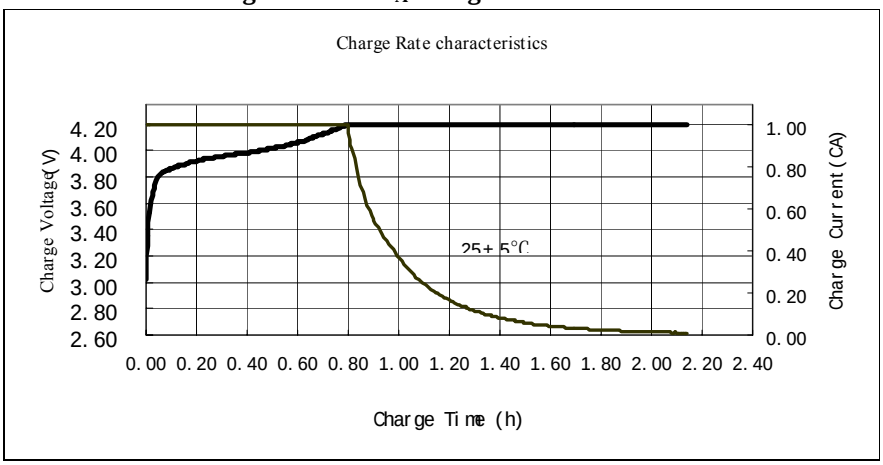

Figure 4. Discharge Rate Performance Curves

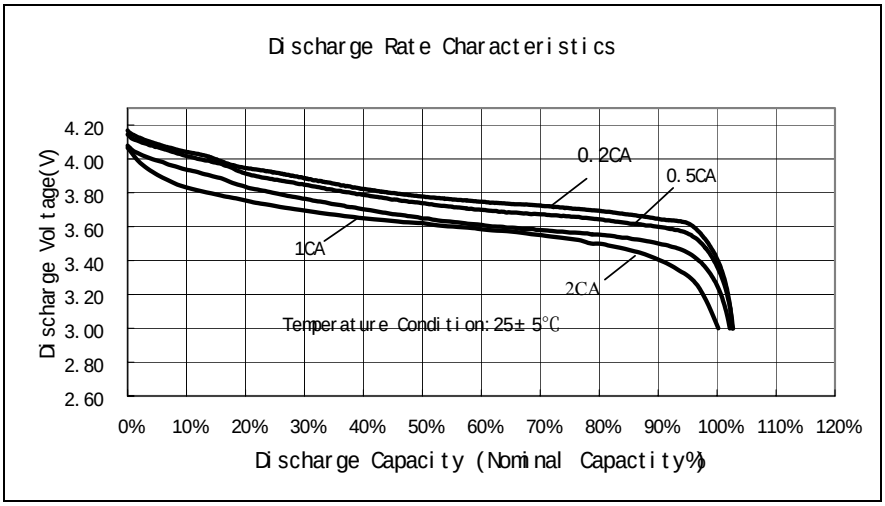

Figure 5. Discharge Performance Curves at Different Temperature

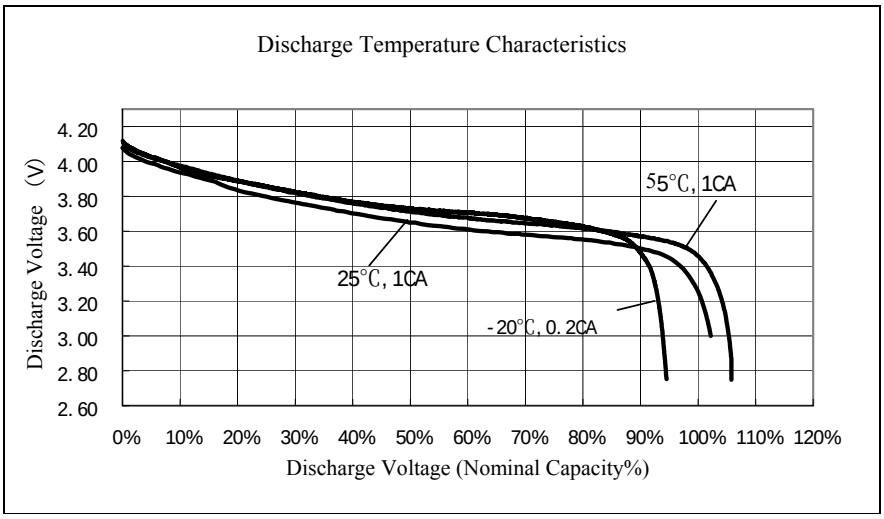
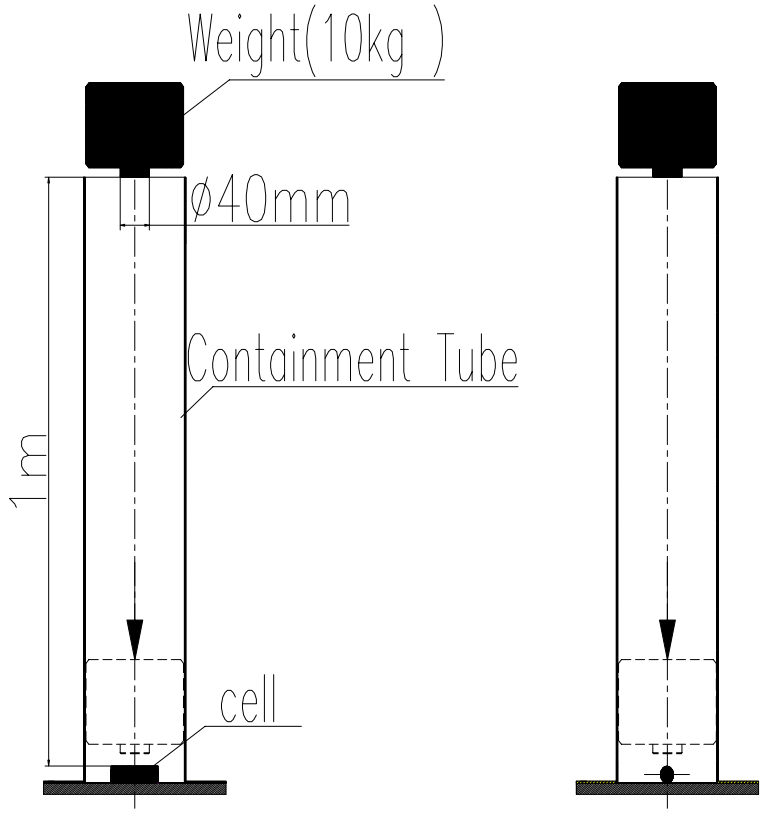
Figure 6. Impact Test